Healthcare : Model P2GPR

Overview

Model P2GPR – 3 Zone Oven, Fridge, Plate Warmer and Neo-Ceram Hot Top and Gantry.

Cook & Serve

Purpose-built for cooking, regenerating, and serving fresh, chilled, or frozen bulk food, this unit gives customers the flexibility to choose their meal at the point of service.
It's ideal for multi-food portioning and distribution, featuring three completely independent compartments— an oven, a plate warmer and a fridge—so hot and cold items are both cooked and held at their optimal temperatures.
The oven section incorporates Moffat's pioneering three-zone, multi-heat control system, providing precise management of food temperature, texture, and presentation. It also uses a unique multi-fan air recirculation system to deliver rapid, even heat distribution throughout. The refrigerated section is equipped with an accurately controlled forced-air cooling system, perfect for storing chilled items such as salads and desserts. A stylish, black ceramic illuminated hot-top offers a self-regulating surface ideal for serving hot meals. The plate-warmer features Moffats unique pull out plate rack allowing up to forty 9" (230mm) diameter plates to be held warm ready for service.
Both the oven and fridge accept GN (Gastronorm) containers, with 8 shelf positions in the oven and 3 in the fridge each set at 71mm intervals—allowing up to eight GN 1/1 containers to be use for cooking in the oven. Built for durability and hygiene, the unit features a bright polished stainless steel interior, satin-finished exterior panels, and plastic-coated front and sides.
Heavy duty hinged doors with robust slam shut catches ensure long lasting performance.

Features:

- LED display lighting and coloured LED oven mode indication (flash red when oven door is left open)
- Food probe and HACCP data gathering system.
- 1/1 GN compatible. Simple to transfer to serving area or load from a companion trolley.
- Neo-Ceram, thermo-panel hot top. (Self regulates around 95°C)
- Steam automatic evac system & oven door air curtains.
- Touch screen, total control system with multi function display and program choice.
- 3 fully controllable oven zones in a landscape configuration.
- Multi fans deliver even heating across the entire oven chamber, ensuring consistent cooking results.
- Designed for bulk production, with 8 shelf capacity in both the oven and the fridge (shelf pitch is 71mm)
- Wide choice of coloured front & end panels. (Standard colour is Goose Wing Grey)
- 4 x precision castors, 2 swivel with brakes and 2 fixed. (Easy to push in a straight line)
- Wheels are off set allowing a tight turning circle.
- Shelving and supports are removable for easy cleaning.
- Hi-Tech insulation.
- Cool to touch door with fully adjustable heavy duty hinges and a slam catch maintaining a tight seal.
- R290 Refrigeration with clean-free, fan assisted condenser.
- Heavy duty pull out plate rack holds up to 40 plates.

Oven Mode Indication

"Master every meal with a 3-zone oven that cooks high, medium, and low density foods simultaneously."

Accessories:

- Fold-down end shelves, up to four can be fitted, two on each side.
- Fold down waste bag holder. This can be fitted on the left or right hand side.
- Fold-down front tray-slide with 3 apertures for cutlery holders.
- Cutlery holders cups for front tray slide option.
- Additional grid shelves. Note: 10 shelves are supplied for the oven and fridge.
- Tow bar & hitch attachment.
- Gastronorm containers.
- Cassette and transfer dolly system in place of the standard shelf hangers.

PRO serve MOFFAT

Plug & Go | Eco-Efficient | Fan Cooling | Quartz | Radiated | Multi fan | Innovation

Models	Weight (kg)	Length x Width x Height (mm)	Electrical Supply	Power Rating (kw)
P2GPR13	190	1330 x 740 x 1372	1 x 13amp 1 PH	2.9
P2GPR32	190	1330 x 740 x 1372	1 x 16amp 1 PH	2.9
P2GPR163	190	1330 x 740 x 1372	1 x 16amp 3PH	5.40
P2GPR323	190	1330 x 740 x 1372	1 x 32amp 3 PH	5.40

Operating modes:

Cook & Serve - Use in the same manner as a traditional convection oven, (Max cook temp 200°C)
Cook Chilled - Regeneration of chilled bulk food (0°C to 8°C optimum 5°C)to above 82°C
Cook Frozen - Regeneration of frozen bulk food (-6°C to -25°C optimum -18°C) to above 82°C
Keep Hot - Holding hot bulk food above 63°C, compartment controlled at 90°C
Keep Chilled - Holding chilled bulk food below 5°C, compartment controlled between 0°C & 5°C
Serve Hot - Hot-top serving area controlled at 90°C
Plate warmer - heats up and holds plates controlled at 40°C

	Left-Hand Fridge Capacity (Usable space totals 51 litres)	Right-Hand Oven Capacity (Usable space totals 113 litres)	Plate Warmer (Usable space 51 litres)	Glass Top Area (Heated area)
Width	340 mm	540 mm	340 mm	1200 mm
Depth	550 mm	350 mm	550 mm	550 mm
Pitch (per shelf)	71 mm	71 mm	N/A	N/A
	3 Grid Shelf Positions (2 Supplied)	8 Grid Shelf Positions (8 Supplied)	40 plates	

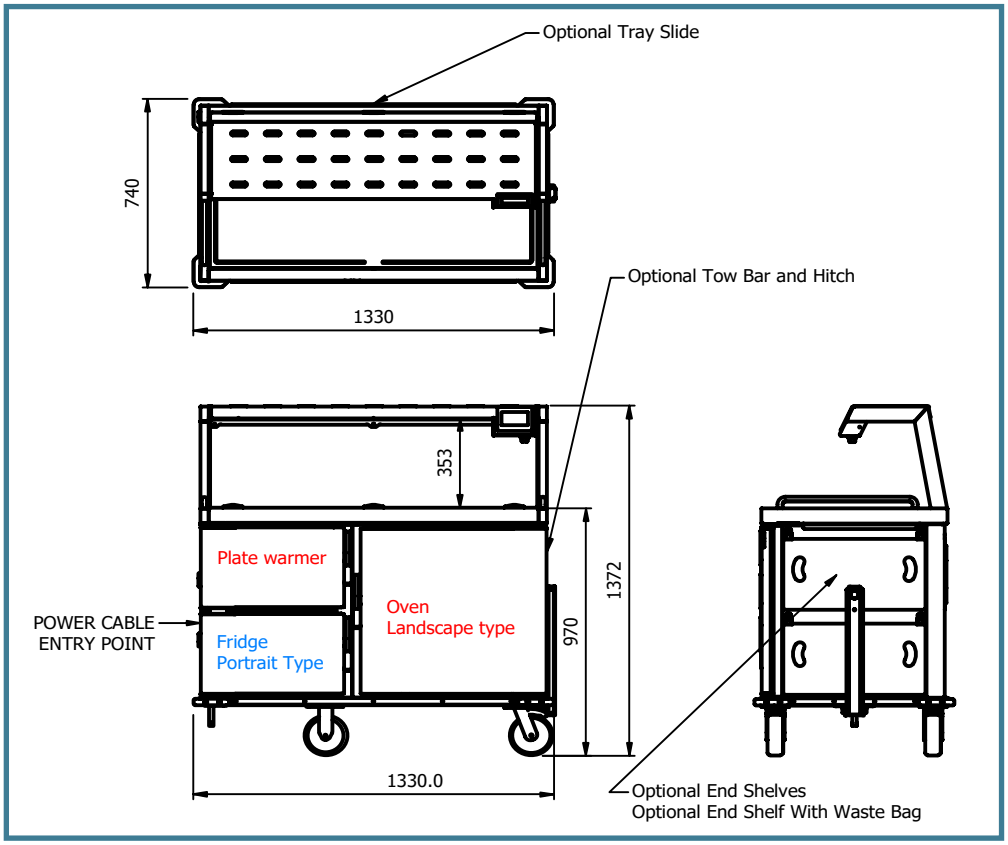

MADE IN BRITAIN

E&R Moffat Ltd.
Bonnybridge
FK4 2BS
Scotland

MOFFAT

www.ermoffat.co.uk
+44 (0) 1324 812272
sales@ermoffat.co.uk