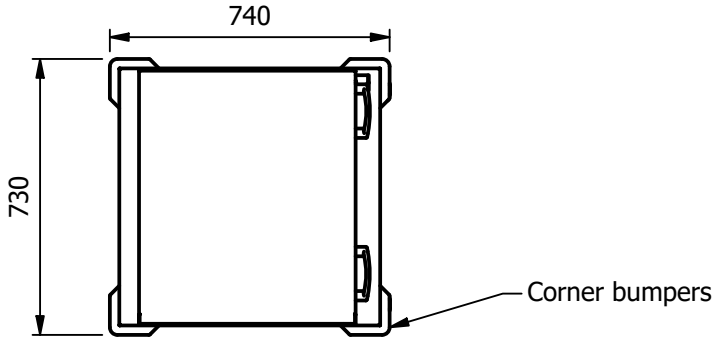

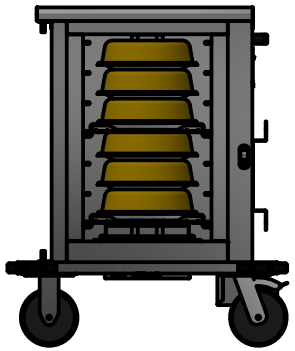

12 10" plated meals
stacked three high
on two shelves

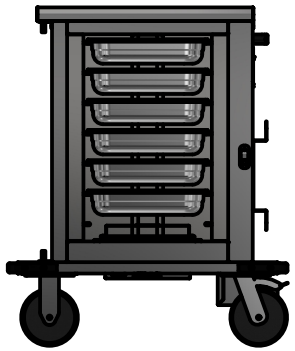

6 off 65mm deep GN 1/1 pans
placed on 6 runners

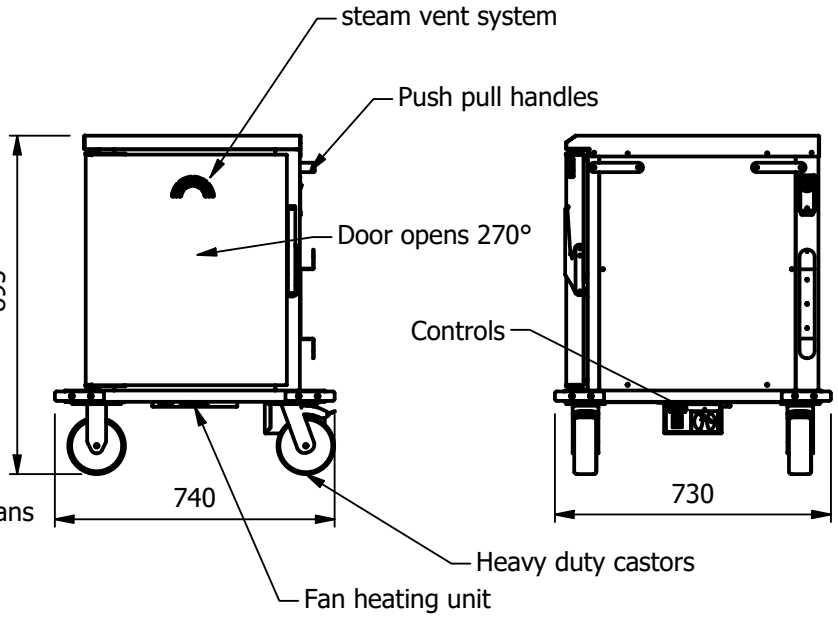

Moffat Specification

Fully Insulated Compatment.
6 shelf positions
to suit Gastronorm pans or shelves

Sahara Fan heating system
Power rating 0.9kw
Complete with 13amp power cord and plug

Thermostatic control 30° - 110° C

Gastronorm tray = 530mm x 325mm
[maximum tray space 540mm x 333mm

Shelf pitch 80mm

Capacity (usable space)
92 Litres (0.09m3)

Dimensions
Length - 740mm
Depth - 730mm
Height - 895mm
Weight - 70kg

Materials
1.2mm 430 Grade St/ Steel Chassis Top & Supports.
0.7 & 1.2mm 430 Grade St Steel Ancillary Parts.
0.7mm 430 Grade St/Steel Outer Panels

Mobility
Castors :- 4 all Swivel 2 With Brakes,

ALL SHEET METAL DIMENSIONS ARE I/S (INSIDE SIZES) (UNLESS OTHERWISE STATED)

ALL DIMENSIONS IN (mm), TOLERANCE = LINEAR ± 0.5mm, ANGULAR ± 0.5mm (OR AS STATED). ALL SHARP EDGES TO BE REMOVED FROM SHEET METAL PARTS

Product	PAN FILE			Product No		© No reproduction or publication of this drawing may be made, and no article may be manufactured or assembled in accordance with this drawing without prior written consent. This prohibition is a term of any contract relating to this drawing. Rights reserved under the Copyright Act 1956 as ammended by the Design Copyright Act 1968.	MOFFAT		
Description	*** BQ6 ***								
Material/Finish		Thickness		Desp/Date					
Legacy P/N		Weight	70	Quote No.		MD No.	VGEN-181929-1		Issue
Client				SO Number	STANDARD	Drawn By	ABB		-
Client Project				Approved By		Date	03/08/2026		
E & R MOFFAT LTD, SEABEGS ROAD, BONNYBRIDGE, FK4 2BS, T: +44 (0)1324 812272, E: sales@ermoffat.co.uk, Web: www.ermoffat.co.uk						Scale	1 : 20	Sheet 1 / 2	A4